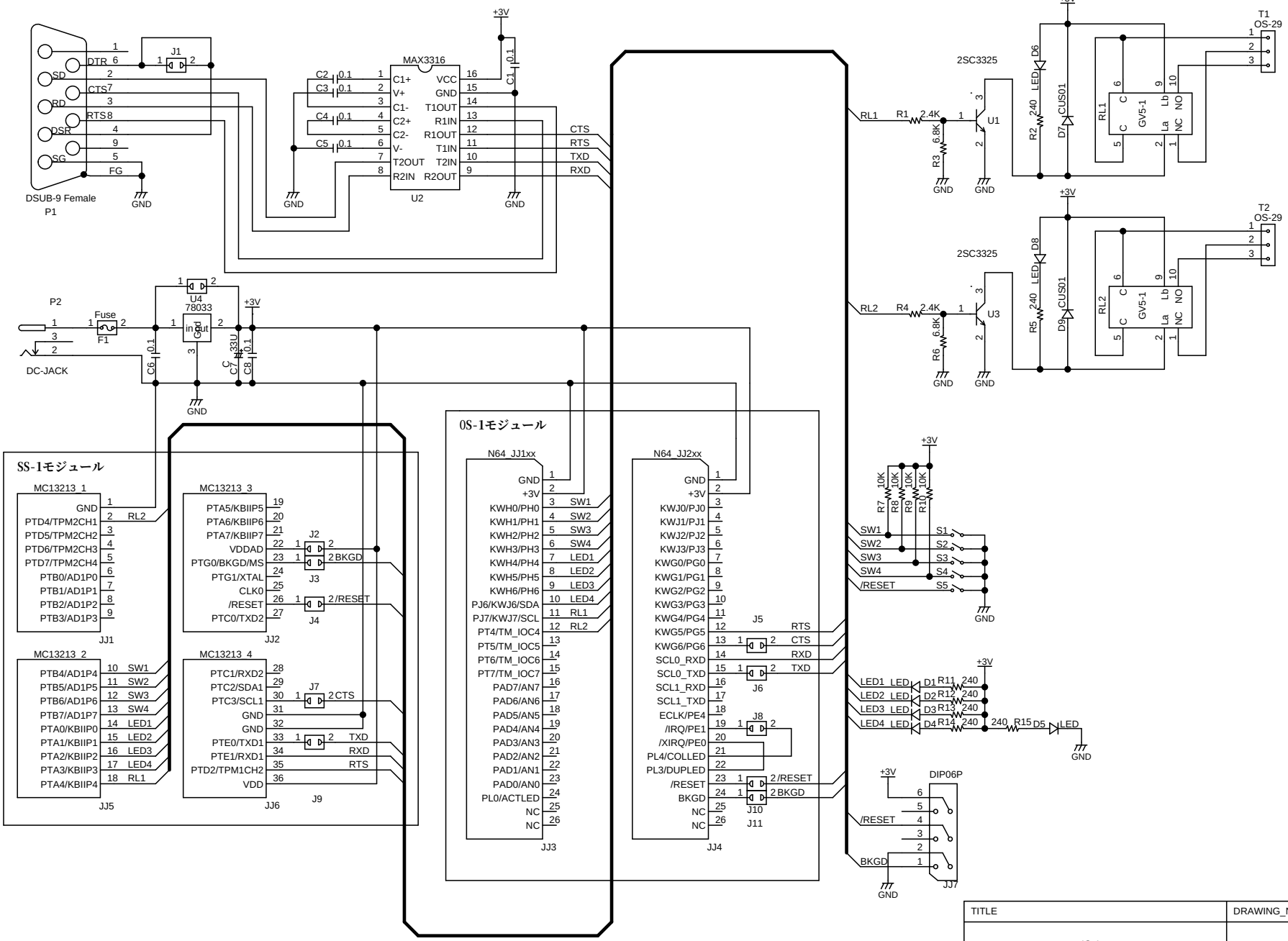

TITLE	DRAWING_No.
IO-1	

SHEET	DATE	DESIGN	
/	2007/ 1/25	Okada Setsuo	SilentSystem www.silentsystem.jp