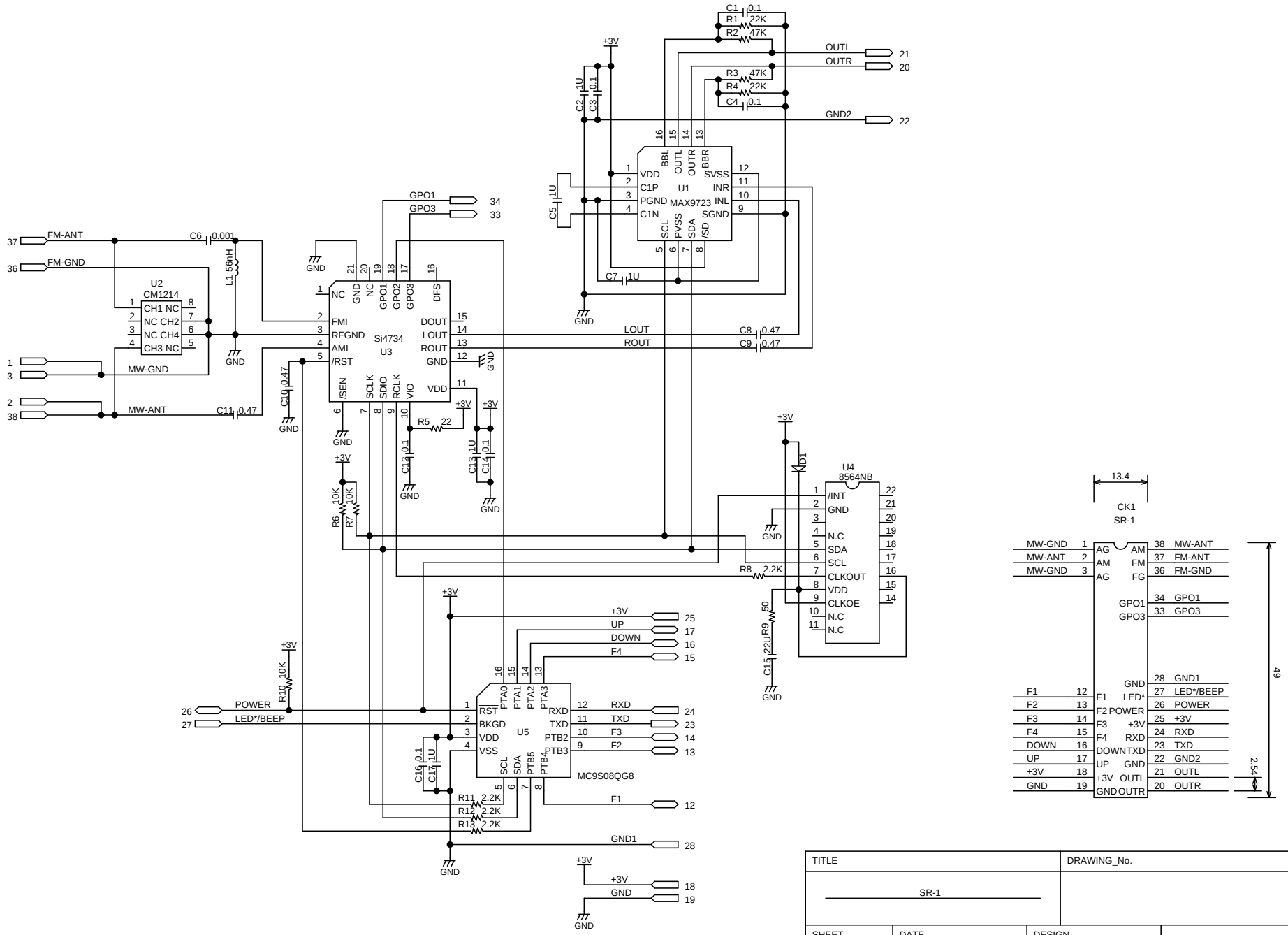

TITLE	DRAWING_No.
SR-1	

SHEET	DATE	DESIGN
/	20090806	OKADA SETSUO