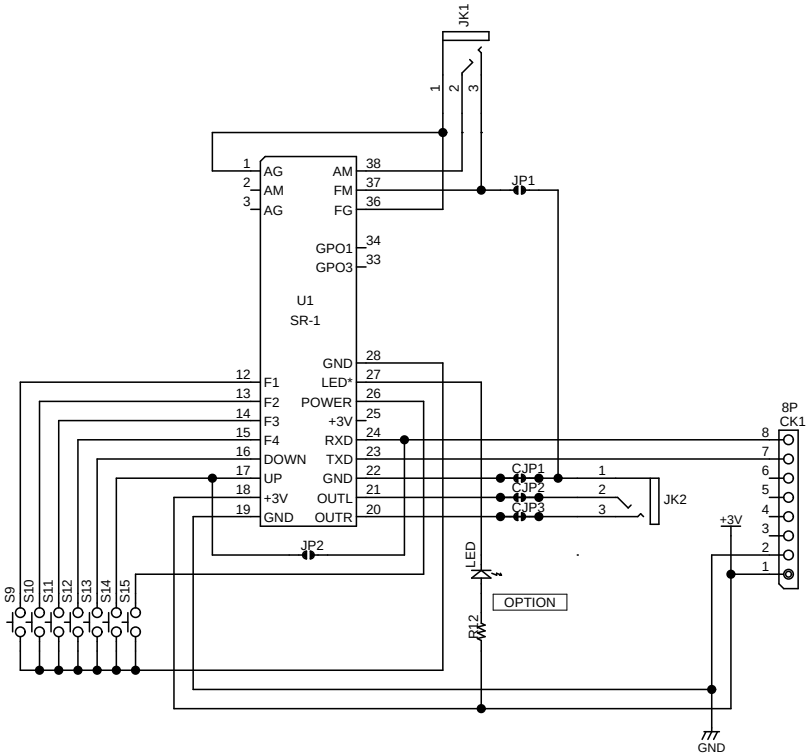

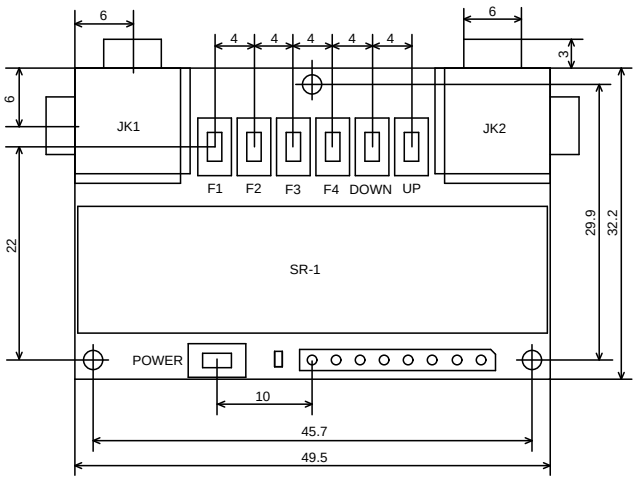

Switch_All_Off * PowerON_RESET = Button or Serial Mode

THEN POWER_On = Button Mode.....JP2 OPEN
UP * Serial Data = Serial Mode (for Silent-2).....JP2 SHORT

POWER_On * PowerON_RESET = Command Mode

UP_On * PowerON_RESET = Monitor Mode

TITLE		DRAWING_No.	
SRIO-1			
SHEET	DATE	DESIGN	
1 / 1	20090820	OKADA SETSUO	