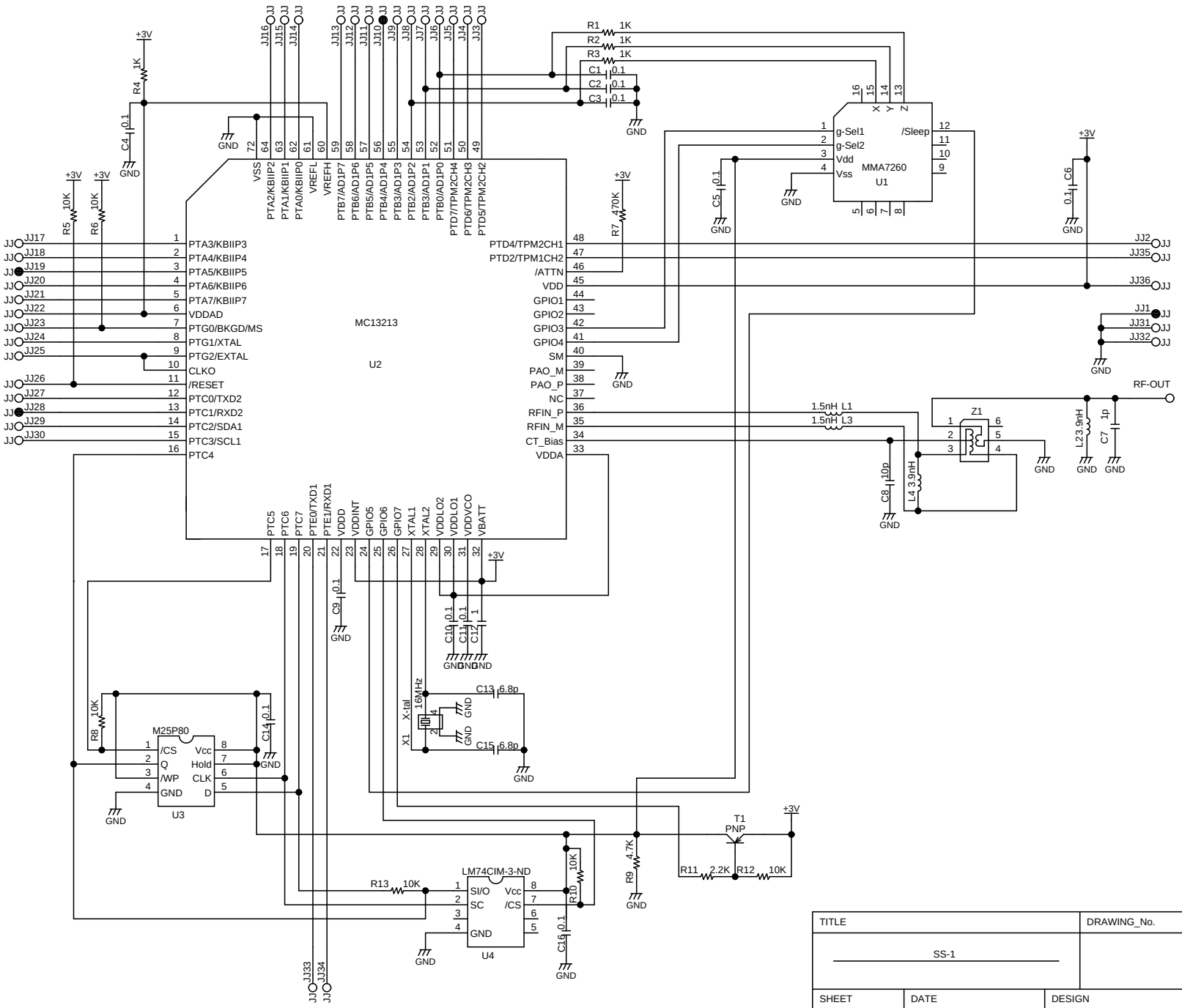

TITLE	DRAWING_No.
SS-1	

SHEET	DATE	DESIGN	
/	2006/04/05	Okada Setsuo	SilentSystem www.silentsystem.jp