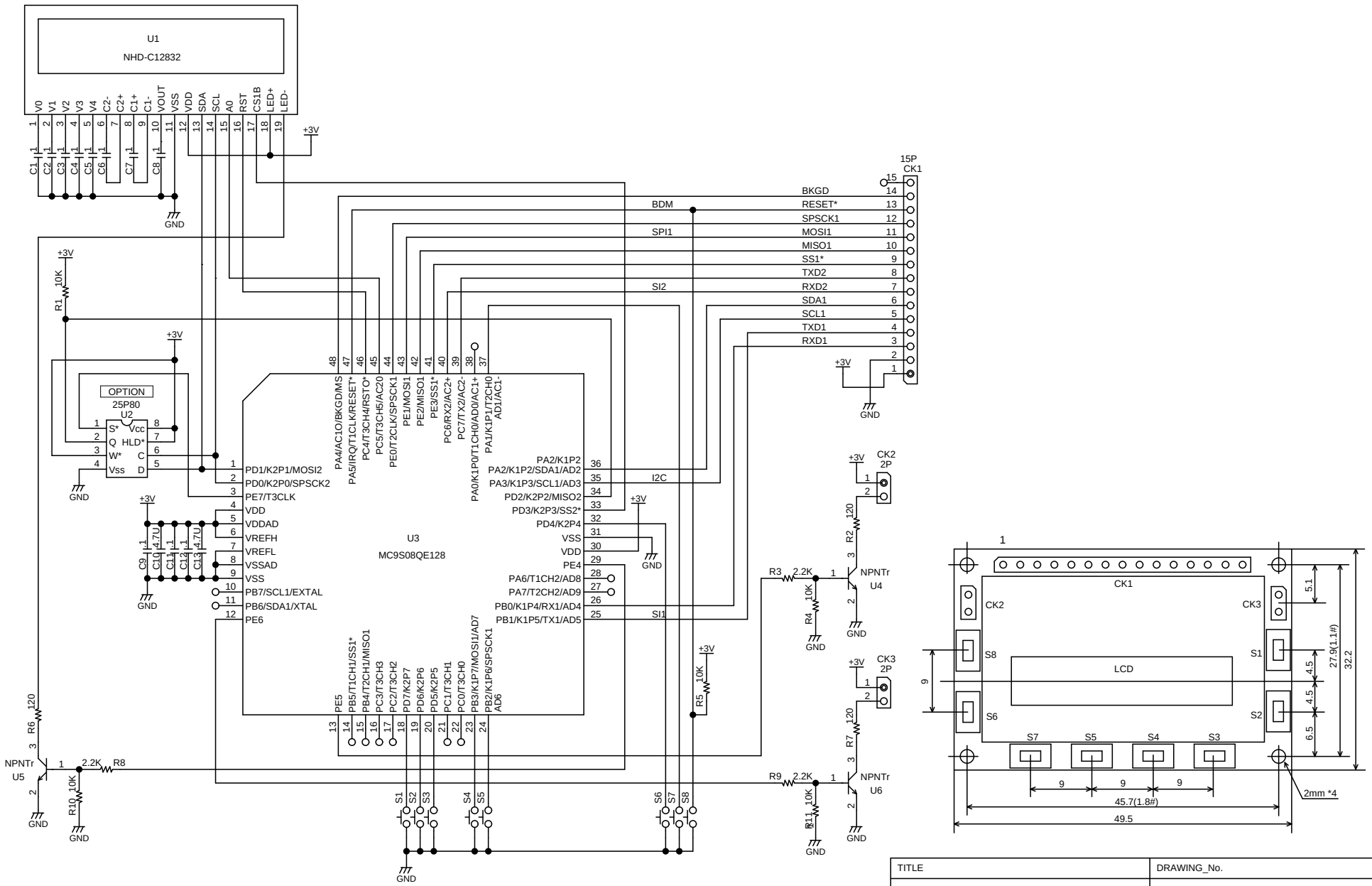

TITLE	DRAWING_No.
Silent-II	

SHEET	DATE	DESIGN
1 / 1	2011/04/15	OKADA SETSUO